2200 SERIES KJC ROTARY JOINT

KR2215

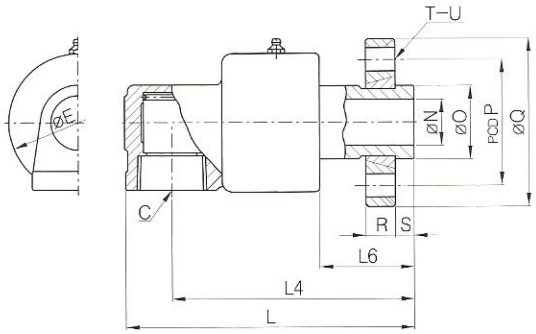

KR2205

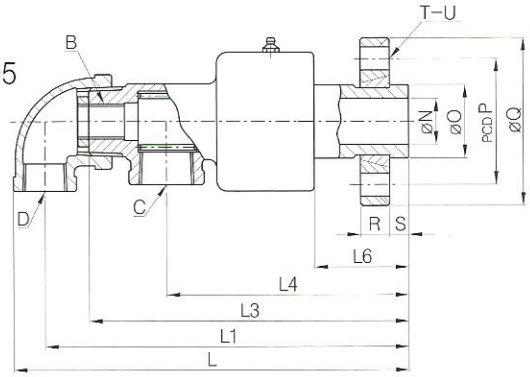

KR2225

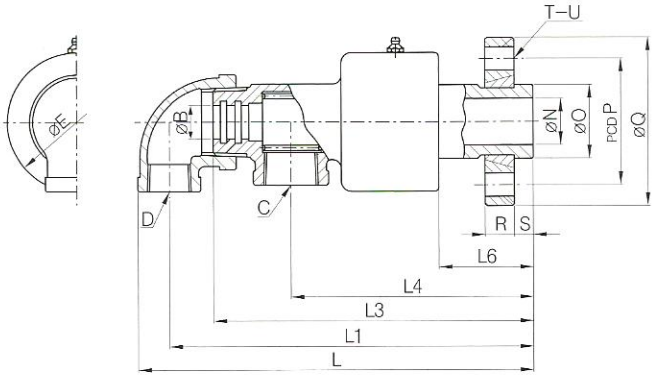

(Unit : mm)

Model No.	B	C (PT)	D (PT)	E	L	L1	L3	L4	L6	N	O	P	Q	R	S	T	U	Wt (kg)
KR2215 – 15A		½″		51	114			96.5	35	13	25	45	62	11	8	4	ø9	0.9
KR2205 – 15A	PF ⅛″	½″	½″	51	162	147	129	96.5	35	13	25	45	62	11	8	4	ø9	1.1
KR2225 – 15A	ø9	½″	½″	51	162	147	129	96.5	35	13	25	45	62	11	8	4	ø9	1.1
KR2215 – 20A		¾″		56	126			105.5	42	17	30	54	74	13	8	4	ø11	1.2
KR2205 – 20A	PF ¼″	½″	½″	56	172	157	138	105.5	42	17	30	54	74	13	8	4	ø11	1.4
KR2225 – 20A	ø9, ø13	½″	½″	56	172	157	138	105.5	42	17	30	54	74	13	8	4	ø11	1.4
KR2215 – 25A		1″		66	138			115.5	45	22	35	60	80	14	9	4	ø11	1.6
KR2205 – 25A	PF ⅜″	¾″	½″	66	189	173.5	152.5	115.5	45	22	35	60	80	14	9	4	ø11	1.7
KR2225 – 25A	ø13, ø16	¾″	½″	66	189	173.5	152.5	115.5	45	22	35	60	80	14	9	4	ø11	1.7
KR2215 – 40A		1½″		88	182			147	55	35	50	75	96	16	9	4	ø11	3.2
KR2205 – 40A	PF ¾″	1″	¾″	88	243	224	201	147	55	35	50	75	96	16	9	4	ø11	3.7
KR2225 – 40A	ø20, ø26	1″	¾″	88	243	224	201	147	55	35	50	75	96	16	9	4	ø11	3.7
KR2215–50A		2″		106	206			168	58	48	65	95	120	19	10	4	ø14	5.8
KR2205–50A	PF 1″	1½″	1″	106	280.5	256	228	168	58	48	65	95	120	19	10	4	ø14	6.5
KR2225–50A	ø26, ø32	1½″	1″	106	280.5	256	228	168	58	48	65	95	120	19	10	4	ø14	6.5
KR2215–65A		2½″		127	240			191	64	60	80	110	136	20	12	4	ø14	10.8
KR2205–65A	PF 1¼″	2″	1½″	127	336	306	271	191	64	60	80	110	136	20	12	4	ø14	11.7
KR2225–65A	ø32, ø40, ø48	2″	1½″	127	336	306	271	194	64	60	80	110	136	20	12	4	ø14	11.7
KR2215–80A		3″		145	268			214	65	70	90	125	154	20	12	6	ø14	15
KR2205–80A	PF 1½″	2″	1½″	145	327	299	275	202	65	70	90	125	154	20	12	6	ø14	13.6
KR2225–80A	ø48	2″	1½″	145	327	299	275	202	65	70	90	125	154	20	12	6	ø14	13.6